Lifting Solutions Group
Axel Johnson International

Beam Clamp IPSTARTEC11

Product information



The Crosby IPSTARTEC11 is a steel beam lifting clamp designed for lifting, transferring and controlled tilting of steel beams. Its welded alloy steel body provides strength in a compact design, while the integrated handle supports easier positioning. Available with a Working Load Limit (WLL) of 1.5 or 2.5 tonnes, depending on the model.

Best used for:

- Lifting and transferring steel beams in industrial handling operations.
- Controlled tilting of steel beams within the specified WLL and jaw opening.

Product benefits:

- Welded alloy steel construction combines structural strength with compact dimensions.
- Integrated handle makes clamp placement and positioning easier.
- Jaw openings of 6–12 mm or 6–20 mm support different beam thicknesses.
- Individually proof tested to twice the WLL, with certification supplied.
- Individual serialisation and included test certificate support traceability and inspection records.

... *Read more*

Material: Alloy steel.
Marking: According to standard, CE-mark, WLL, Logo, Type, Jaw opening, Serial number, Proof load test date
Temperature range: -40°C (-40°F) up to +100°C (+212°F)
Standard: EN 13155

Certex Latvija
info@certex.lv
+371 67611882

© November 2026 - All Rights Reserved

Lifting Solutions Group
Axel Johnson International

Beam Clamp IPSTARTEC11

Blueprint

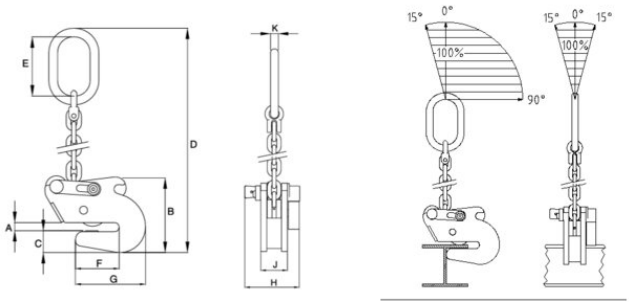

Technical data

Part code	WLL ton	Jaw width mm	Model	A mm	B mm	C mm	D mm	E mm	F mm	G mm	H mm	J mm	K mm	Weight kg
502100150120240	1.5	6-12	1.5-IPSTARTEC11	6-12	140	39	575	110	81	129	126	54	16	6.6
502100250200240	2.5	6-20	2.5-IPSTARTEC11	6-20	210	55	725	135	115	182	140	74	18	14.5

Certex Latvija
info@certex.lv
+371 67611882

© November 2026 - All Rights Reserved